Comprehensive Aftermarket Packaging Guidelines

PACCAR PARTS
A DIVISION OF PACCAR

Introduction

PACCAR Parts expects packaging from suppliers that is sufficiently robust for product to be safely and securely handled multiple times. The parts should arrive at PACCAR Parts dealer locations undamaged and in saleable condition. This requires satisfactory individual item, case, carton, and pallet packaging.

This manual contains the current package specifications for PACCAR North and South American aftermarket part purchases, with respect to pre-pack, storage, and distribution of goods to **PACCAR Parts Distribution Centers (PDCs)**, and through Direct Distribution (DSP) to PACCAR dealers. This manual is digital and is always up to date. Please note the version date and dispose of all out-of-date copies of this manual.

PACCAR Parts also has an international version of this guideline for Global or Best Cost Country (BCC) suppliers. These guidelines can be obtained by contacting the PACCAR Parts Global Sourcing group or the PACCAR Parts Operations Quality Manager.

For PACCAR Corporate or Truck Division guidelines, see the ML-2000 or contact the Corporate Logistics Packaging Manager.

You are expected to inform your employees with the contents of this manual, to the extent that it relates to their involvement in shipping product to PACCAR Parts locations.

Questions about this manual or the guidelines should be addressed to the PACCAR Parts Operations Quality Manager.

Changes and Updates

Effective 1/1/2017
- New infraction codes added
- Infraction charges updated (Supplier NET)

Effective 6/1/2017
- 48x40 pallets require 4-way entry (Section 4.11)
- Plastic or Nylon Banding (Section 4.10.1)

Effective 2/1/2018
- Clarification of overpack container and shrink wrapped usage (Section 4.9 & Section 4.10.2)

Effective 1/1/2020
- Updated descriptions for infraction codes (Section 1)
- New requirements for individual saleable unit part labels (Section 6.2 & Section 6.4.1)

Effective 7/19/2021
- New requirements for retail packaging. (Section 5.2.4)
- Update to labeling and individual identification (Section 6 & 6.4.1)

Effective 8/1/2022
- Infraction dispute timeline, highlight of additional supplier compliance program info, violation codes moved to appendix. (Section 1 & Appendix D)
- Individual part label exception for low value parts (Section 7.8.1)
- SDS Updates/Revisions section updated with current requirements (Section 9.4)
- Clarifying language throughout

Objective

This document seeks to standardize packaging and labeling practices for PACCAR Parts' suppliers in the interest of optimizing space and throughput while minimizing freight impact and cost for all parties.

Contents

1. Supplier Compliance Program Definition 5
2. Pallet Size and Composition 6
2.1. Maximum Height 6
2.2. Pallet Orientation 6
2.3. Weight Requirements 6
2.4. Pallet Damage 6
2.5. Stringer Design 6
2.6. Fumigation/Heat-Treatment Requirements 6
2.7. Pallet Dimensions 7
2.7.1. 48"Long x 40" Wide 7
2.7.2. 24"Long x 40" Wide 7
2.7.3. 20"Long x 24" Wide 8
2.7.4. 20"Long x 48" Wide: "Fender Box" 9
2.7.5. Oversize Pallets 9
3. Container Packing 10
3.1. Container Consolidation 10
3.2. Separate by Destination 10
3.3. Multiple Identical Parts 10
3.4. Pack for Handling by: 10
3.4.1. LTL/TL 10
3.4.2. Parcels 10
3.4.3. Weight Divisions 10
3.5. Adequate Bracing 11
3.6.1. Mixed Piece Packing 11
3.6.2. Part Number Segregation 12
4. Boxes and Cartons 12
4.1. Manual Handling: Weight Requirements 12
4.2. Minimum Container Requirements 12
4.3. Pallet Overhang 13
4.4. Efficient Container Use 13
4.5. Dunnage Material 13
4.6. Container Closure 13
4.7. Kit Packaging 13
4.8. Container Consistency 14
4.9. Overpack Container 14
4.10. Securing to Pallet 15
4.10.1. Banding 15
4.10.2. Shrink Wrap 15
5. Individual Part Packaging 16
5.1. Package Sizing Requirements 16
5.2. Packaging Types 17
5.2.1. Corrugated Boxes 17
5.2.2. Corrugated Tubes 18
5.2.3. Bagging 18
5.2.4. Retail Packaging 19
5.2.5. Bubble Wrap 19
5.2.6. Wood Crates 20
5.2.7. Loose Parts 20
6. Labeling 21

6.1. Barcode Requirements 21
6.2. Label per Unit Minimum 21
6.3. Overpack Requirements 21
6.4. Label Examples 21
6.4.1. Individual Identification 22
6.4.2. Container Labels for Carton/Pallet 22
6.4.3. "Packing Slip Enclosed" Labels 24
6.4.4. "Ship-To" Label 24
6.4.5. "Mixed Load" Labels 25
6.4.6. Sequential Numbering 25
6.5. Label Configurations: Pallet Boxes/Containers 25
6.5.1. One (1) Part Number per Pallet 25
6.5.2. Mixed Part or PO Numbers 26
6.5.3. Container with Packing Slips 27
7. Barcoding 27
7.1. Barcode Policy 27
7.2. Required Categories 27
7.3. Symbology 27
7.4. Required Formats 27
7.5. AIAG Data Identifiers 28
7.6. Automotive Industry Action Group (AIAG) barcode specifications 28
7.7. SPQs 28
7.8. PPD Discretion 28
7.8.1. Low Value Parts 28
8. Packing Slips 29
8.1. Packing Slip Requirements 29
8.2. Packing Slip Placement in Shipments 29
8.3. International Transport Requirements 29
8.3.1. Document Attachments. 29
8.3.2. Additional Required Export Steps 29
9. Hazardous Materials 30
9.1. SDS Definition 30
9.2. Federal Regulations 30
9.3. SDS for New Material 30
9.4. SDS Update/Revisions 30
10. Glossary: Packaging Terms 31
11. Appendix A: NMFC, Item 222: Corrugated Fiberboard Boxes (cartons) 32
12. Appendix B: Proper Palletization 33
13. Appendix C: Common Packaging Specifications 34
13.1. Small Polished Part Packaging Requirements 34
13.2. Specification for Polished or Chromed Parts 35
13.3. Specification Hood Packaging 36
14. Appendix D: Infraction Violation Codes 41
15. Appendix E: Aftermarket Packaging Approval Process Form 42
16. **INDEX** 43

1. Supplier Compliance Program Definition

Experience has proven that prompt attention to working with PPD personnel in resolving issues when they first occur is the best way to avoid infractions and charged penalties.

This guide is not comprehensive of all possible non-compliances, just those related to packaging and distribution. Many issues are self-evident: don't ship more than purchase order quantities, always ship in in pre-approved standard package quantities (SPQ), etc.

For program overview on non-compliance policies, visit SupplierNet, PACCAR Parts' online Supplier Guidelines site. See **section 15 - Supplier Compliance Programs**.

Suppliers must review and/or dispute infractions within **60 days** of the infraction issue date, to allow for timely resolution. Disputes submitted after 60 days will be closed and require escalation within the Supplier Information System (SIS/Mize). Escalations submitted **90 days** after the infraction issue date will not be considered for reversal.

When the PDC approves infractions, email alerts are sent to the assigned supplier infraction contact within the SIS.

PACCAR treats different types of infractions (Violation codes) as unrelated events to avoid issuing monetary penalties wherever possible. Suppliers have a grace period of 30 days from the infraction issue date to correct a problem. If any additional infractions of the same type occur between the next 30-60 days, a charge of $200 per infraction is debited. The charge increases to $300 if the problem still has not been resolved in 60-90 days. The charge increases to $500 per infraction if the same violation type has occurred within the prior 90-120 days. After 120 days without an infraction, the violation code resets to $0.

Time Period Since Previous Infraction of Same Violation Code	Debit Amount
0-30 Days	$0
31-60 Days	$200 Per Infraction
61-90 Days	$300 Per Infraction
91-120 Days	$500 Per Infraction

See Appendix D for the list of Infraction Violation Codes in the SIS.

2. Pallet Size and Composition

2.1. Maximum Height

Maximum height for a pallet with product is 45". Over-height products are acceptable, with prior approval of the PPD Aftermarket Packaging Manager or PPD Operations Quality Manager.

2.2. Pallet Orientation

Note that the pallet stringers run in the length direction and that the top and bottom deck boards run in the width direction.

2.3. Weight Requirements

Mechanically handled pallet loads may not exceed 3,500 pounds. In addition, deck boards and stringers must provide adequate support/protection to the load and enable the pallet to be safely lifted with 42" fork blades.

2.4. Pallet Damage

PACCAR Parts will not accept pallets with any damage or defects. Pallets should be new or in near new condition and must remain intact and properly functioning throughout their intended lifespan, which may include delivery to a dealer. Suppliers are responsible for failure of their pallets while in transit to a PPD facility, unless they can show that the failure was caused by carrier mishandling.

2.5. Stringer Design

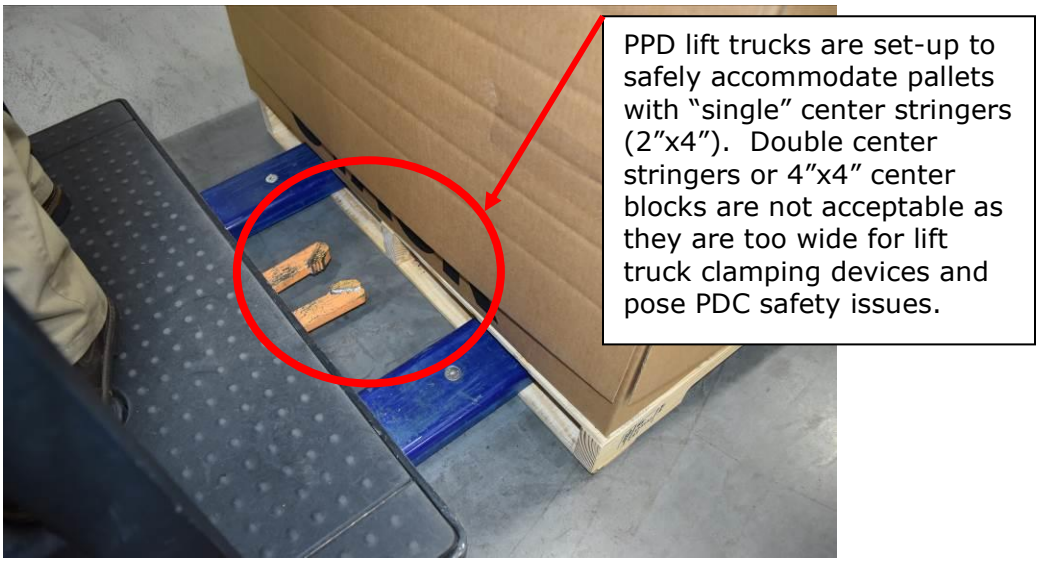

2.6. Fumigation/Heat-Treatment Requirements

Pallets are required to meet International Plant Protection Convention standard ISPM #15 and must be marked with the IPPC logo and the two letter ISO code for the country that treated the WPM, when applicable. For more detail, please see Section 11: Customs Brokerage & Documentation of the Supplier Guidelines; Subsection: Solid Wood Packaging Material Requirements (ISPM 15)

Example of the WPM mark:

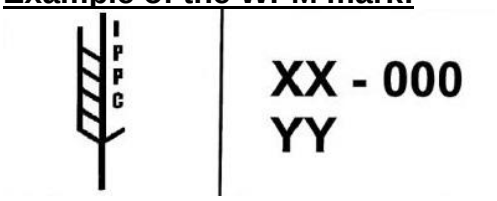

2.7. Pallet Dimensions

PACCAR Parts requires that all palletized loads capable of having a footprint of 48" x 40" or less, be loaded on approved pallets, as shown below. Only pallets with the following approved dimensions may be used to ship product to a PPD warehouse. For variance see section 2.7.5. Dimensions are always expressed as L x W x H.

2.7.1. 48” Long x 40” Wide

Pallets measuring 48” x 40” must have 4-way roll in entry with 2 equal fork openings measuring a minimum of 2.5” x 9” on the stringer side and 2 equal fork openings measuring a minimum of 3.5” x 15” on the width side

SCHEMATIC VIEW OF 48” X 40” PALLET

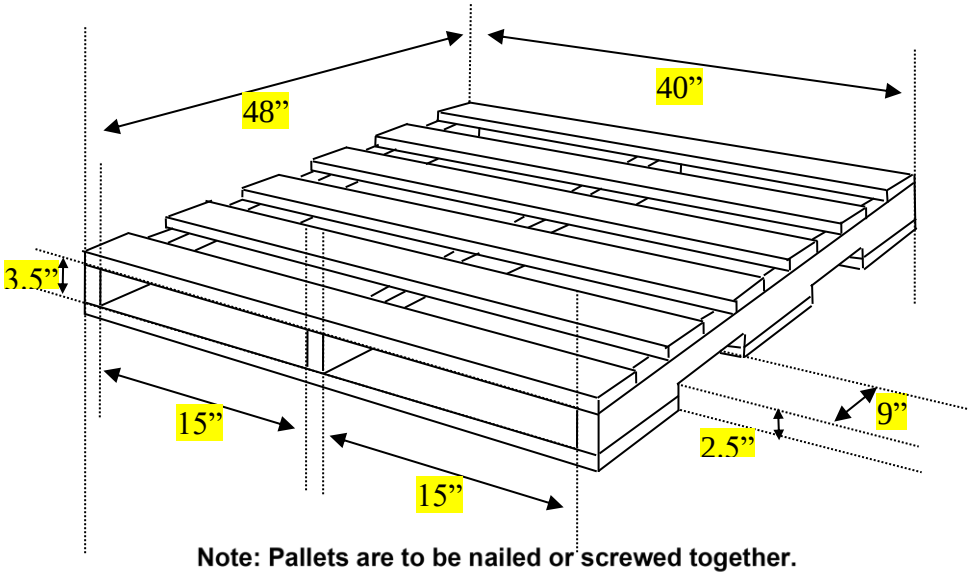

Note: Pallets are to be nailed or screwed together. Staples are not acceptable.

2.7.2. 24” Long x 40” Wide

Pallets measuring 24” x 40” must have 2-way roll in entry with 2 equal fork openings measuring a minimum of 3.5” X 15” on the width side

SCHEMATIC VIEW OF 24” X 40” PALLET

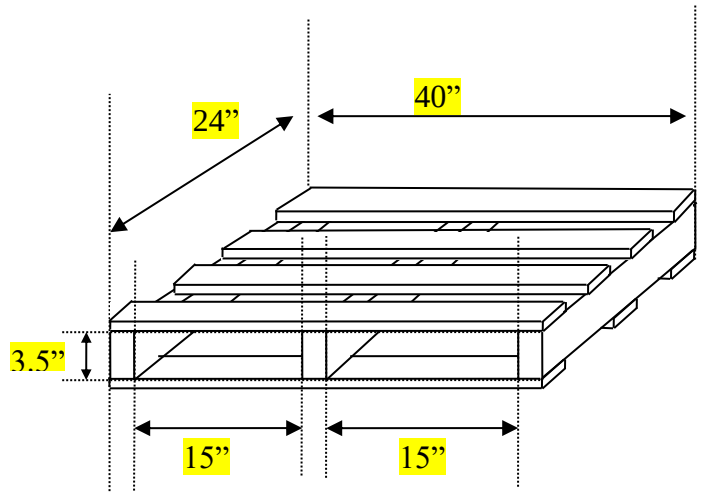

Note: Pallets are to be nailed or screwed together. Staples are not acceptable.

2.7.3. 20” Long x 24” Wide

Pallets measuring 20” x 24” must have 2-way roll in entry with opening measuring 3.5” x 18”

SCHEMATIC VIEW OF 20” X 24” PALLET

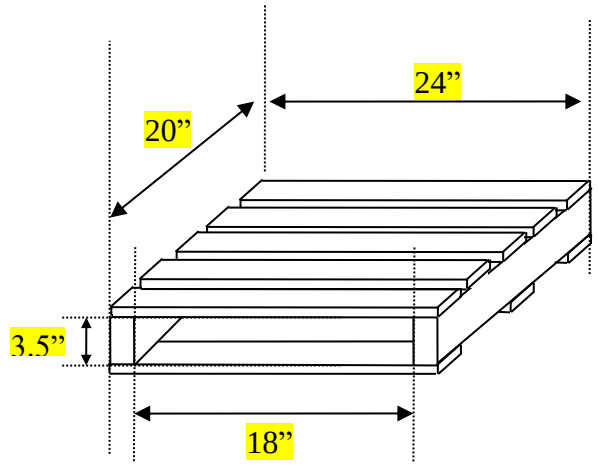

Note: Pallets are to be nailed or screwed together. Staples are not acceptable.

2.7.4. 20” Long x 48” Wide: “Fender Box”

Pallets measuring 20” x 48” must have 2-way roll in entry with 2 equal openings on the width side measuring at least 3.5” x 18”

SCHEMATIC VIEW OF 20” X 48” PALLET

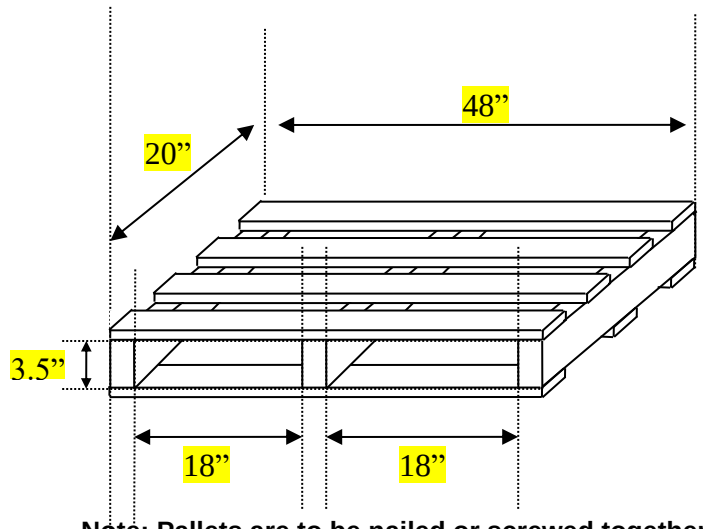

Note: Pallets are to be nailed or screwed together. Staples are not acceptable.

2.7.5. Oversize Pallets

Pallets greater than 48”x40” may only be used

a) with prior approval of the PPD Aftermarket Packaging Manager or PPD Operations Quality Manager.

b) when the footprint of the product exceeds 48” in length or 40” width.

Pallets larger than 48” x 40” **must** have 4-way roll in entry with minimum openings of 2.5” x 9” on the stringer side.

3. Container Packing

3.1. Container Consolidation

All parts shipments must abide by PACCAR Parts and supplier agreed upon specific quantities and configurations. Any enhancements or changes to the agreement must be approved by the appropriate PACCAR Parts purchasing or marketing agency with notification to the PPD Operations Quality Manager.

As a general guideline, the supplier must consolidate into the fewest number of overpack containers.

3.2. Separate by Destination

Shipments must be separated by their ultimate destination in accordance with routing guides provided by PACCAR Parts' Traffic Department. Pack for one destination per pallet.

3.3. Multiple Identical Parts

When shipping multiple over-pack containers, all items with the same part number must be loaded into the same container and contiguous to each other. Scattered parts are unacceptable.

3.4. Pack for Handling by:

3.4.1. LTL/TL

All Less-Than-Trailer-Load (LTL) and Trailer-Load (TL) shipping containers and unitized loads must be palletized for handling by industrial vehicles.

3.4.2. Parcels

All UPS and other parcel carrier shipments must be capable of being handled manually and conform to PACCAR requirements for maximum weight and size.

3.4.3. Weight Divisions

All containers 70 lbs. or less must be made capable of being handled manually. Shipping containers over 70 lbs. must be palletized for handling by industrial vehicles.

3.5. Adequate Bracing

All parts must be adequately braced to prevent part movement, and concealed part or container damage.

3.6. Over-Pack Containers

PACCAR Parts expects that multiple part/unit loads per pallet will be over packed into a skid carton to better protect the load from damage and pilferage.

3.6.1. Mixed Piece Packing

Over pack containers with mixed parts must be packed with the highest quantity items on the bottom, if they are not at risk for damage from heavier items being placed on top.

If heavy parts must be placed in the same carton with high count light parts for consolidation reasons, they should be placed adjacent to the other parts, or slip sheets should be used to distribute the weight. Corrugated sheets must be used to separate layers of different parts. Fragile items must be boxed for protection if they are shipped with heavy items.

1.8 Container Packing

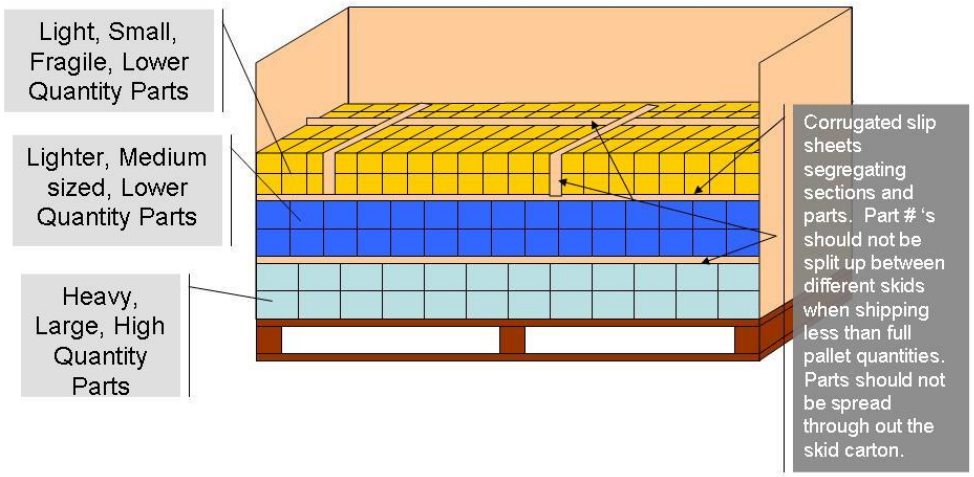

3.6.2. Part Number Segregation

If multiple part numbers are shipped in an over-pack container, each part number must be segregated. This can be accomplished by using corrugated divider sheets, boxes, bags, or partitions. Product labels are to be turned up, and visible to the receiver. If sealed boxes are used to segregate parts, master pack labels are required on those containers.

4. Boxes and Cartons

4.1. Manual Handling: Weight Requirements

Packages that will be manually handled may not exceed 70 pounds.

4.2. Minimum Container Requirements

All corrugated shipping containers must meet minimum requirements specified by item 222 (Sections 1 through 6) of the National Motor Freight Classification (NMFC). Reused corrugated material is not acceptable as a shipping carton or dunnage material. See Appendix A for detailed information.

4.3. Pallet Overhang

Loads must be organized so that no container or part overhangs the edge of the pallet without prior approval. Failure to do so is considered an issue under the Supplier Compliance Program. See Appendix B for more information on proper palletization.

4.4. Efficient Container Use

Shipping containers must be completely full of product, and as small as possible, while still providing adequate protection to the contents. Partially filled containers are unacceptable. Any void spaces should be filled with approved dunnage.

4.5. Dunnage Material

Dunnage material must perform its function of reducing part movement/abrasion while remaining easily and legally recyclable or disposable. Styrofoam “popcorn” for instance is not acceptable as it is not recyclable or easily disposed of.

4.6. Container Closure

All containers must be completely sealed and secured to their pallet. Open or loose containers promote loss and pilferage, and are unacceptable.

4.7. Kit Packaging

All kits must be packaged with component parts together. PPD distribution centers will not repackage kit components for Aftermarket distribution.

4.8. Container Consistency

Container sizes should be consistent for the product being shipped. This will simplify both supplier and PACCAR's shipping and receiving processes.

4.9. Overpack Container

Overpack shipping containers (illustrated below) prevent damaged boxes, product, missing parts, etc. Loose boxes that do not withstand transit when simply shrink wrapped to a pallet should be shipped in an overpack container. Skid cartons should have a lid or other closure and be anchored to the pallet. Skid cartons should meet the requirements for pallet size and composition (section 2), container packaging (section 3), boxes and cartons (section 4), and labeling (section 6). In some cases, based on product type, shipping in an overpack container is not feasible. In these situations, shipments must still adhere to other packaging requirements such as shrink wrap, strapping, overhang, etc. (section 4).

4.10. Securing to Pallet

Palletized containers or parts must be secured to the pallet with stretch wrap or mechanically tensioned strapping. Hand tensioning of strapping is unacceptable unless product fragility dictates otherwise. If strapping is used, it may only be made of nylon. Steel banding is both a safety hazard and difficult to dispose of.

4.10.1. Banding

Corner protectors under banding are required to prevent crushing.

4.10.2. Shrink Wrap

Corner protectors must be placed under shrink wrap to prevent crushing.

5. Individual Part Packaging

PACCAR Parts requires product to be shipped in aftermarket approved packaging, production packaging is not acceptable unless previously approved. Packaging details for each part must be approved by PACCAR Parts Operations prior to product launch. Alterations of the packaging without approval are prohibited.

The example below shows an unapproved change in packaging that would result in an infraction.

Original Packages

Unapproved Changes

5.1. Package Sizing Requirements

- Parts packaging must be optimized for the size of each part, to ensure the smallest possible box is used that will effectively protect the part. Boxes with a gap of 2” or more on any side of the product are not permitted.
- Bagged products may exceed the 2” guideline to accommodate proper barcode labeling.
- See examples below of an oversized box.

5.2. Packaging Types

5.2.1. Corrugated Boxes

- Product weight and/or size exceeds the allowance for a bag option. See bag option below.
- Product contains grease or liquid (should also be bagged and sealed within the corrugate internally to contain leaks).
- Specifications such as corrugate wall, fluting thickness, paper weight, puncture tests, drop tests, etc., are up to the supplier to determine, but must be compliant with NMFC guidelines.
- Packaging must be sufficient to survive transportation and retain display quality.
- Lightweight retail packaging must be overpacked for shipment.

5.2.2. Corrugated Tubes

- Long narrow products which have the same protection needs as corrugated boxed items.
- End caps of the tubes need to be secured to the corrugate so that heavy products do not fall out of the package.

5.2.3. Bagging

- Product weighs less than 5 lbs.
- Product does not have any sharp edges or anything that may tear holes in bag.
- Bag thickness will be determined based on the rigidity, and shape of the part. Bags should typically be 3 MIL thick, but alternatives may be acceptable depending on the product.
- Vapor Corrosion Inhibitor (VCI) bags should be used for any product at risk of moisture or shock damage.

5.2.4. Retail Packaging

- Inscriptions on any product, its packaging and any document supplied with such product (warning labels, directions for use, warranty information, etc.) must be in English, French, and Spanish languages and no language shall be more prominent than another in compliance with state and federal laws of the PACCAR Parts dealer network, i.e. *The Charter of the French Language*.
- TRP, PACCAR Genuine, Kenworth and Peterbilt branded packaging will be determined and approved by prior arrangement with the PACCAR Parts Creative Service Manager.
- Retail packaging should always be over packed for shipment.

5.2.5. Bubble Wrap

- Product is oddly shaped and requires protection but may not fit or need a corrugate box.
- Bubble wrap must be taped to prevent unraveling.
- Bubble wrap can also be used as dunnage inside of a corrugate box.
- Exhaust pipes are an example that often only require bubble wrapping.

5.2.6. Wood Crates

- High strength is needed for heavy and difficult loads.
- Large size is required, or long-term storage.
- Rigidity and stacking strength is critical.
- Hoods, Cabs, and Roofs are examples of crated items.
- Fumigation standard from section 2.6 applies to crates.
- See Section 13.3 for additional crate requirements.

5.2.7. Loose Parts

- Some parts, usually hard metal products such as cross-members, draglinks, and brackets, can be shipped without additional overpack material.
- Product must be very strong and can withstand being shipped in bulk.
- Product is not a cosmetic piece on the truck meant to be in pristine condition.

6. Labeling

Any updates or changes to labels must to be reviewed and approved by the PACCAR Parts Operations Quality Manager.

6.1. Barcode Requirements

Stamping or imprinting part numbers on parts **does not** remove the requirement for each part, at the saleable unit level, to include a barcode label with the PACCAR Parts part number. All parts should be identified with an appropriate bar-coded label.

6.2. Label per Unit Minimum

Parts that are sold to PACCAR Parts must be properly identified with a minimum of one label per saleable unit. See section 6.4.1 for individual label requirements.

6.3. Overpack Requirements

Overpack containers, including stretch wrapped pallets, must have at least two container labels located on adjacent corners. Relevant labels include:

- Container Labels (2 adjacent sides)
- Packing Slip Enclosed Labels
- Ship-To Labels
- Mixed Load Labels (on 4 Sides, if applicable)
- Pallet Sequence Labeling

6.4. Label Examples

Reference the following subsections for more detail (*Images not to scale*). For questions regarding logo content, placement, or branding, inquire with PACCAR Parts product marketing management (PPD.Product.Marketing@paccar.com). Labels must be placed where they are visible, and in no case should a label be placed to cover or obscure a logo.

6.4.1. Individual Identification

All parts (or saleable units in SPQ) **must** be individually identified with a bar-coded label including the PACCAR Parts part number, as it appears on the purchase order. The part number must be clearly visible and legible. Part descriptions **must be** in English, French, and Spanish languages, in compliance with applicable state and federal laws of the PACCAR Parts dealer network. The below examples reference the required information to include on the individual saleable unit. TRP, PACCAR Genuine, Kenworth or Peterbilt Genuine branded parts have additional requirements, please reference the branding manuals on SupplierNet.

Note: See section 7 for barcode standards.

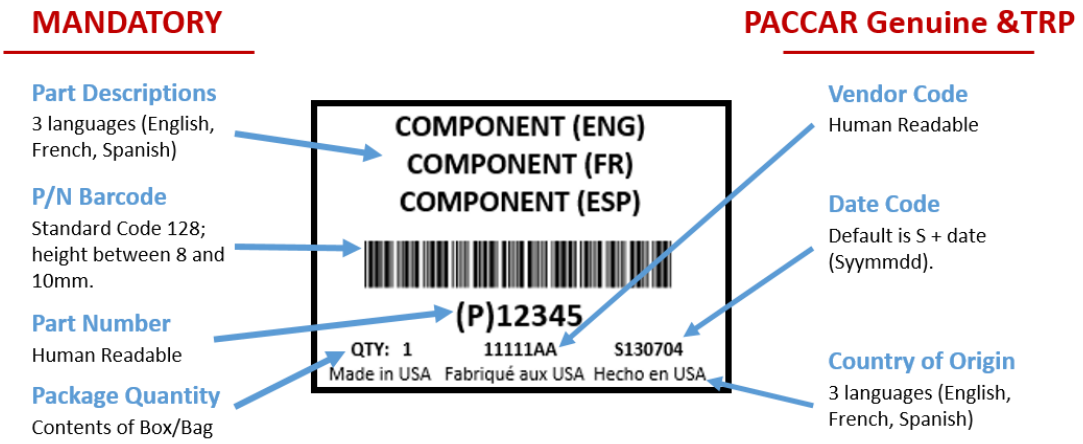

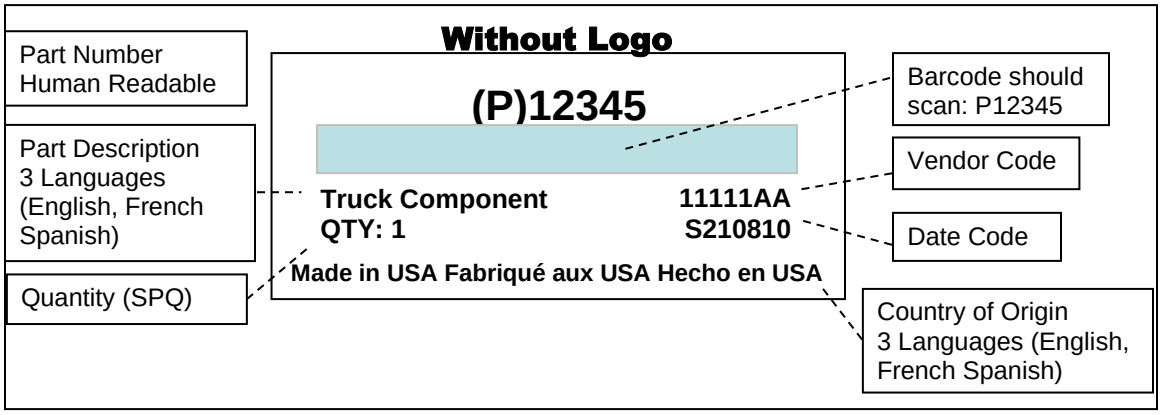

6.4.2. Container Labels for Carton/Pallet

PPD requires that each container (box, skid/pallet, skid carton) in a shipment, whether LTL or parcel carrier, must have a barcoded container-level label (variously called container label, master pack label or over-pack label). This label describes the nature of the product contained. See section 7 for barcode requirements.

As shown below, all container labels must have the following information in human readable and approved barcode formats:

- **PACCAR Parts part numbers (those used on purchase orders)**
- **Part Description (optional)**
- **Quantity in the Container**

- **Purchase Order Number**
- **Vendor/Supplier Code**
- **Date of Manufacture, Date of Packaging, or Serial Number (optional)**
- **Sequence Number (optional)**

The barcode would scan: P12345	PART NO (P) **12345**	DESCRIPTION **TRUCK COMPONENT**	
The barcode would scan: Q32	QTY (Q) **32**	PO (K) **ST-A518402**	PO Number would scan: KST-A518402
The barcode would scan: V11111AA	SUPPLIER (V) **11111AA**	SERIAL (S)	Date of manufacture or other tracking number
Sequential Number of Relevant Carton:	**1 OF 2**	COUNTRY OF ORIGIN **MADE IN XXX**	

Label Dimensions: 4” (H) x 6” (W) or sized to fit container

Note: master container labels must be duplicated for the pallet level. In addition to labeling each overpack carton with the above label, the supplier must affix the same master container label on the pallet box/stretch wrap for each part number and PO #.

If multiple parts are enclosed, then the container must have each item in the box identified. This requires either multiple sets of labels, or a single “Mixed load” type label as shown below. Field requirements are the same as the above example.

6.4.2.1. Supplier Part Numbers

Supplier's part number must not appear on labels of products ordered under a TRP, Kenworth, Peterbilt, or PACCAR branded part number. If supplier product includes the supplier part number, or excludes the PACCAR Parts part number, then a cross reference file must have been previously provided to PACCAR Parts Product Marketing or Operations Quality.

Whenever possible PACCAR Parts prefers its own part number barcoded on the label.

6.4.3. "Packing Slip Enclosed" Labels

PACKING SLIPS ENCLOSED

PACKING SLIPS ENCLOSED
Label Dimensions: 4" (H) x 6" (W)

Packing Slips Enclosed labels are required for the pallet that contains the packing slips.

6.4.4. "Ship-To" Label

SHIP TO:
PACCAR Parts Renton PDC
502 Houser Way North
Renton, WA 98057
USA

Pallet 1 of 4

SHIP TO Label Dimensions: 4" (H) x 6" (W)

6.4.5. "Mixed Load" Labels

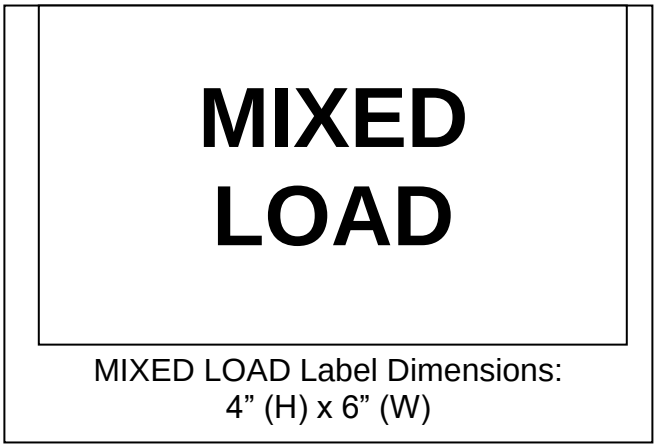

All containers that contain more than one part number must be clearly labeled as a "Mixed Load". Mixed Load labels must be placed on all four sides of mixed containers. Small loose items shipped via truck or UPS may have only one label, placed adjacent to the container label.

6.4.6. Sequential Numbering

Individual units of a complete shipment must be sequentially numbered as part of the total shipment (i.e., 1 of 5, 2 of 5, etc.). The sequence number may be included on the container label or "ship-to" label.

6.5. Label Configurations: Pallet Boxes/Containers

6.5.1. One (1) Part Number per Pallet

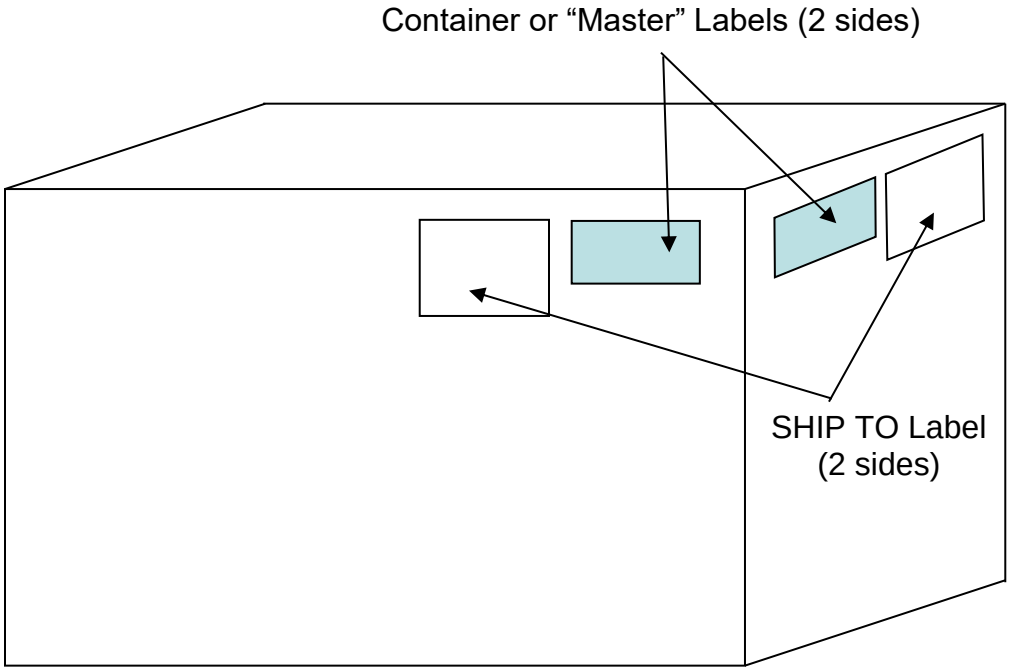

6.5.2. Mixed Part or PO Numbers

6.5.2.1. Container Exterior

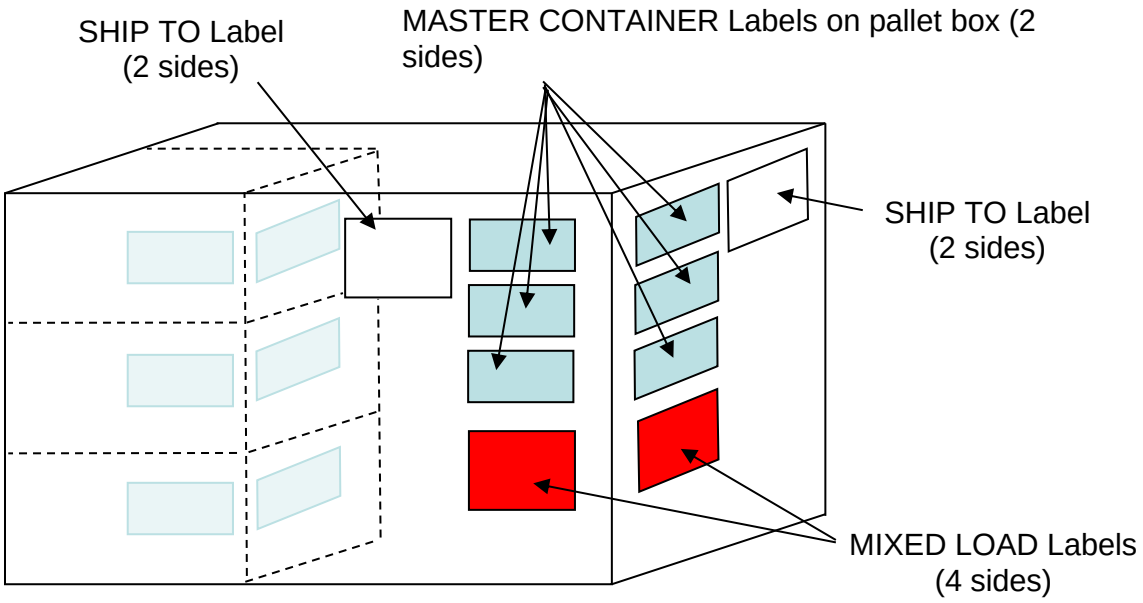

6.5.2.2. Container Interior

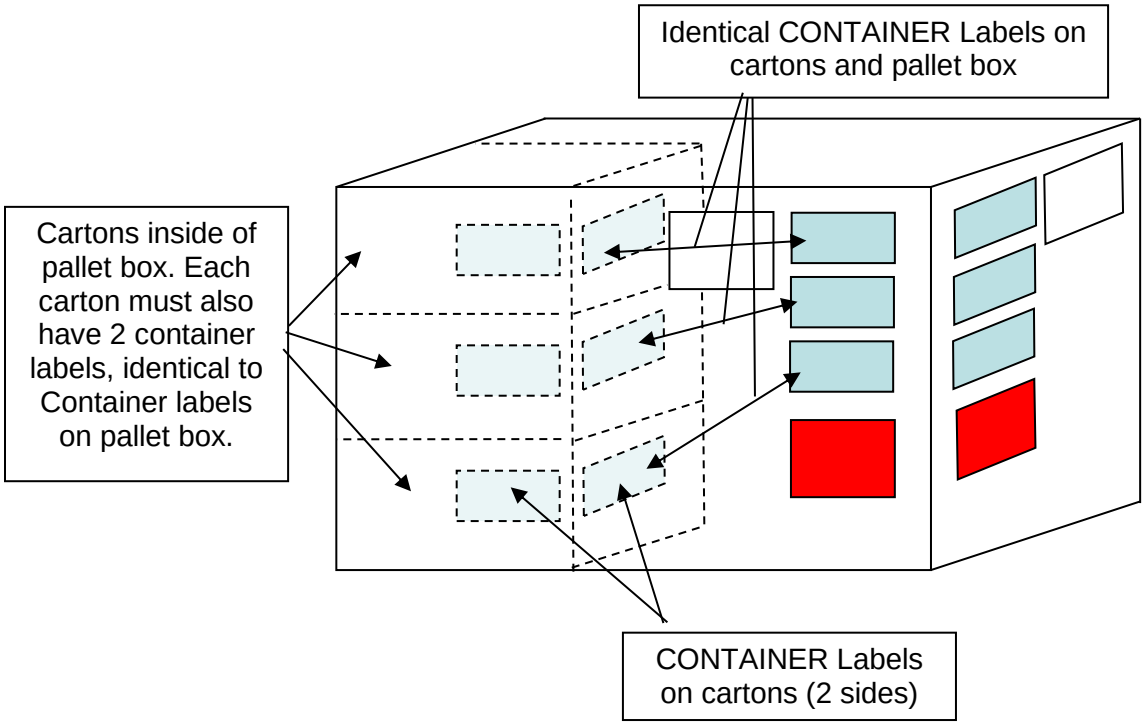

Note: For shipments with multiple part numbers, cartons, bags, or dividers must be used to separate the different part numbers inside of the pallet box. Container labels must be identical to the pallet box/pallet level labels used.

6.5.3. Container with Packing Slips

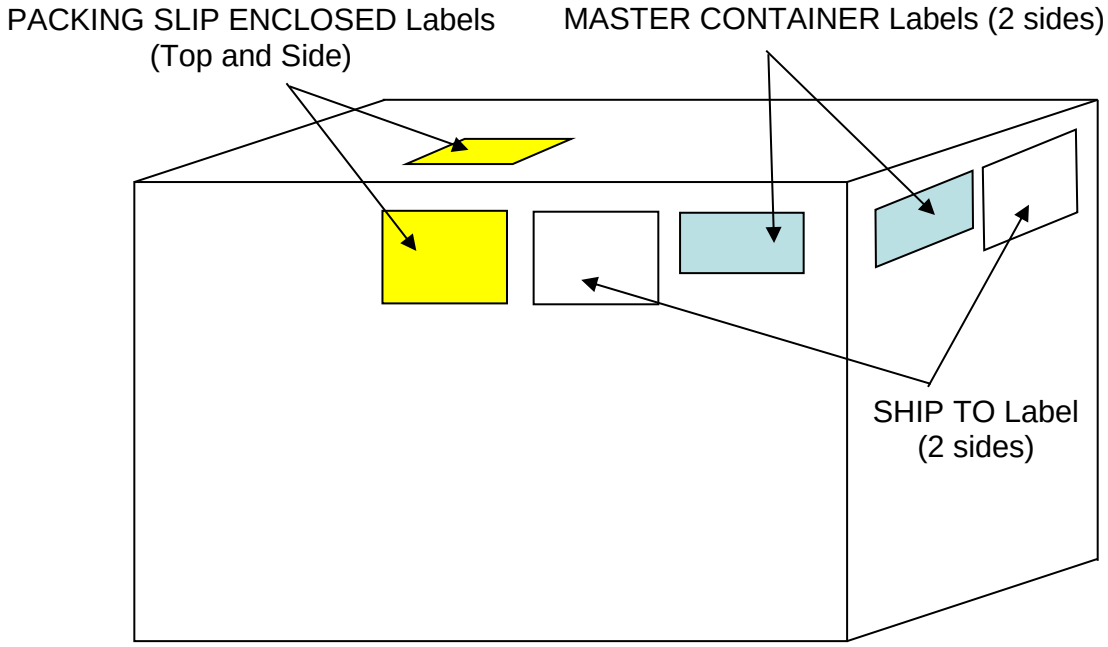

7. Barcoding

7.1. Barcode Policy

PACCAR Parts uses an alpha numeric barcode receiving system. The system is required to support downstream dealer operations, and to receive parts into the PDCs. It also increases the overall accuracy of transactions, which is beneficial to supplier and PPD.

IT IS A PACCAR PARTS REQUIREMENT THAT ALL PARTS SHIPPED FROM A SUPPLIER HAVE BARCODE LABELS AFFIXED. THIS INCLUDES INDIVIDUAL PART LABELS ON INDIVIDUAL SALEABLE UNITS, UNIT PACKS, AND MASTER CONTAINER LABELS ON OVER PACK CONTAINERS.

7.2. Required Categories

PACCAR Parts Division (PPD) requires two categories of barcode labels to be applied to its shipments: individual part labels, and container/master pack labels.

7.3. Symbology

PPD will only accept barcode symbologies: “128”, “3 of 9”, or UPC. 128 is preferred. For UPC, regular cross reference files must be provided and kept up to date. Ongoing maintenance is the responsibility of the supplier. Updates should be provided to the Operations Quality Manager on a regular basis (monthly, quarterly, annually, and/or on demand).

7.4. Required Formats

PPD requires each *individual* part at the saleable level be labelled with the PPD part number in both human readable and barcode format.

7.5. AIAG Data Identifiers

AIAG Field Identifier Codes are optional, but, if utilized, should be used consistently. If the code is embedded in the barcode, it must also be present in the human readable field title. For embedding in the barcode, **remove the parenthesis**. There must be no extraneous characters before the AIAG identifier, or between the identifier and part number.

AIAG Identifier	Field Definition
(p)	Customer Part Number (PPD's)
(q)	Quantity
(k)	Purchase Order Number
(v)	Supplier Code (per PPD)
(1p)	Supplier Part Number

7.6. Automotive Industry Action Group (AIAG) barcode specifications

Suppliers are expected to conform to all AIAG barcode specifications and standards as documented in the AIAG Trading Partners Labels Implementation Guideline (except as it specifies code 39 as standard).

7.7. SPQs

Parts with a PPD standard package quantity (SPQ) greater than one (1) must be packaged together in the proper SPQ and have the barcode label applied to the SPQ package.

7.8. PPD Discretion

At its discretion, PPD may allow certain exceptions to the barcode requirement, as stated below.

7.8.1. Low Value Parts

Individual barcode labels are not required for parts valued at <$1.

8. Packing Slips

8.1. Packing Slip Requirements

Each packing slip should include the following information:

- Number of containers involved
- PACCAR Parts part number, including suffix, used on the purchase order
- Quantity of each part number
- Description of each part number
- PPD purchase order number

8.2. Packing Slip Placement in Shipments

For each PDC shipment, include the packing slips inside the pallet box of the first pallet. For example, if there are 4 pallets going to a specific PDC, the SHIP TO labels would identify the 4 pallets by including the text “1 of 4”, “2 of 4”, “3 of 4” and “4 of 4”. See Section 5.4.4 for SHIP TO Label example. The packing slips should be easy to find at the top of the first pallet box.

If the supplier is shipping to multiple PDCs, there should be separate packing slips included in the first pallet box for each of the PDC destinations.

The supplier should ensure that the PACKING SLIPS ENCLOSED labels are included on the pallet boxes of the first pallets, as per Section 5.4.3.

8.3. International Transport Requirements

Orders where the destination is across international borders, e.g.:

- a US Supplier shipping to a Canadian or Mexican PDC, even if the consolidation point is a US address, or
- a Supplier from another country shipping to a PDC in the USA

must include a duplicate packing list located outside the container, and a Commercial Invoice with the actual country of origin (manufacture) of the product noted. For detailed information see Supplier Guidelines, Section 11: Customs Brokerage & Documentation on SupplierNet.

8.3.1. Document Attachments

Customs documents must be placed in an envelope, attached securely to the outside of the box or skid, and marked “FOR CUSTOMS CLEARANCE: DO NOT REMOVE”.

8.3.2. Additional Required Export Steps

Customs documents must be emailed to one of the below inboxes, depending on destination.

- Panama: email the docs to PPD.Panama.Crossdock@paccar.com
- Mississauga Canada: email the docs to PPDRockford.Canadian.Crossdock@paccar.com
- Montreal Canada: email the docs to PPD.Montreal.Crossdock@paccar.com
- Mexico: email the docs to PPMSLP.Traffic@paccar.com

9. Hazardous Materials

9.1. SDS Definition

The Occupational Safety and Health Administration (OSHA) in 1989 expanded its Hazard Communication Standard to cover all employees who could potentially be exposed to hazardous chemicals in their work areas — regardless of the place of employment or the nature of the work. The Hazard Communication Standard requires that chemical manufacturers and importers thoroughly evaluate chemicals that they produce and import to determine their hazard potential. If a chemical presents a hazard, a safety data sheet (SDS) must be developed to communicate the hazard potential to users.

9.2. Federal Regulations

All hazardous materials must be packaged in accordance with the US Title 49, Code of Federal Regulations and/or Canadian Transportation of Dangerous Goods Act to be accepted by a PACCAR receiving location.

9.3. SDS for New Material

If a new hazardous material is being shipped to any PACCAR location, the material shipment, regardless of size, must be accompanied by an appropriate safety data sheet (SDS) for that location.

9.4. SDS Updates/Revisions

Chemical manufacturers, importers, distributors, or employers who become newly aware of any **significant information** regarding the hazards of a chemical, or ways to protect against the hazards shall revise SDSs **within 3 months**. The labels shall be revised **within 6 months**. If the chemical is not currently being produced or imported, the chemical manufacturer or importer must add the information to the SDS/labels before the chemical is introduced into the workplace again.

10. Glossary: Packaging Terms

Burst strength - The strength of corrugated or combined board material expressed in pounds per square inch or kg. per square cm.

Corrugated Divider Sheets - Flat corrugated sheets used to divide layers of material. Sheets should be approximately the same size as the container they are used in.

Deck Board - The surface element used in the construction of a pallet deck.

Dunnage - Materials used to hold, secure, and protect goods during shipment.

Dynamic loading - Forces that act upon an object during movement (shipment).

Footprint - The area of floor space occupied by a particular object.

Four-way Entry - A pallet whose configuration permits entry from all sides.

Minimum Order Quantity (MOQ) – The package quantity at which PACCAR Parts purchases product. The MOQ must be in multiples of the SPQ but can be greater than the SPQ.

Mixed Pieces - A shipping container that has more than one part number in it is said to have "mixed pieces".

Over-pack container - The largest or final container used for unitizing a packed shipment of parts.

Partitions - A set of corrugated or solid fiberboard pieces slotted so they interlock when assembled to form several cells into which parts may be placed for shipment.

Sales Units - The retail unit of measure in which a particular part is sold.

Serial Number - A sequential number initiated and maintained by the supplier that allows for simple identification of material.

Standard Package Quantity (SPQ) – The package quantity at which PACCAR Parts sells product. We require all product shipped to PACCAR Parts related entities to be packaged at their SPQ.

Stringer - A continuous longitudinal member that supports the deck of a pallet.

Two-Way Entry - A pallet whose configuration permits entry from two sides only.

Unit of Measure (UOM) - Measurement system used to quantify product: e.g., foot, inch, each, pack, etc.

11. Appendix A: NMFC, Item 222: Corrugated Fiberboard Boxes (cartons)

Selection of fiberboard boxes will be determined by the chart below, as established by the National Motor Freight Classification Item 222.

Box Strength Guidelines			
Maximum Weight of Contents in Pounds	Size Limit of Box in Inches (L+W+D)	Bursting Test in Pounds per Square Inch	Edge Crush Test (ECT) in Pounds per Inch Width
Single Wall Corrugated			
30	75	200	32
40	75	200	40
50	85	250	44
65	95	275	55
80	105	350	NA
Double Wall Corrugated			
60	85	200	48
80	95	275	51
100	105	35	61
120	110	400	71
140	115	500	82
150	120	600	NA

Bursting Test and Edge Crush Test data is displayed in the Box Maker's Certificate typically located on the bottom of the box. Ideally, best results are obtained where contents of box are limited to about 50% of the maximum gross weight specified.

Boxes must be original containers for the product being shipped or of new construction.

The re-use of older boxes is not acceptable.

Interior Packaging Protection

Product should be positioned within the center of the package, with sufficient protection to prevent damage and eliminate shifting or movement while in transit. Material selected for protection should take into consideration shock & vibration during transit & handling.

Protective material must be placed between product and all six walls of the box. A minimum of 1" of padding is required for standard shipments, and 2" required for fragile or heavy / unique shaped items. Material should remain easily and legally recyclable or disposable.

Types of acceptable materials, depending on product shipped, level of protection required, and recyclability, include but are not limited to: cushion wrap, bubble wrap, cotton sockets, corrugated wrap, cellulose wadding, vermiculite, expandable foam, etc.

12. Appendix B: Proper Palletization

Building The Perfect Pallet[1]

There are three main causes of compression-loss when palletizing boxes:
Pallet overhang, wooden pallets, and interlocked stacking patterns.

We know, boxes are not rocket science, but did you know that merely changing the way you stack and palletize your boxes could significantly affect their performance? Incredibly, it has been found that improper palletization can result in boxes losing up to 50% of their compression strength!

Maximize the value you get from the corrugated products you purchase and get more bang from your packaging buck!

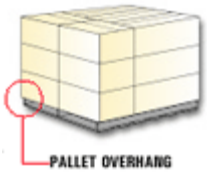

Pallet Overhang

The most common culprit of compression-loss is boxes hanging over the edge of the pallet. When this occurs, the two vertical edges of the box not hanging over the pallet edge are primarily supporting the load. In fact, when boxes are stacked on a pallet with as little as ½ hanging-over, as much as 30% of their strength is lost! The solution here is to make sure you are using the proper pallet size or the proper palletizing pattern to avoid overhang. **You may also want to look at reconfiguring the box dimensions to fit the pallet.**

Wooden Pallets

With the space between deck boards on a wooden pallet averaging 1-4 inches, it is common that the bottom of the box is not being entirely supported. This too can cause significant compression losses in the unit load. In fact, up to 15% of compression strength may be destroyed. This may be avoided by choosing pallets with deck boards that are strategically positioned so all the vertical edges of the box (corners) are being supported. **Another option would be to use corrugated pallet liners to cover the bottom of the pallet (pallet deck) to make it a solid surface.**

Interlocked Patterns

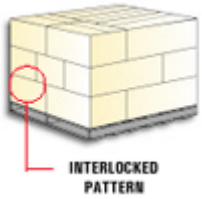

This situation can be much like a double-edged sword. Using an interlocked pattern, which rotates each layer on the load, can destroy up to 50% of the compression strength. Palletizing boxes so that they are columnar, or vertically stacked (stacking one box directly on top of the other) is the preferred method. This method, however, makes it difficult to keep the load intact during handling. **One solution to this problem is to stabilize the load by using stretch wrap.** This can be done by using a stretch wrap machine, or by simply spiral wrapping the load by hand.

[1] "Palletization". Great Little Box Company. http://www.greatlittlebox.com/packaging/storing/

13. Appendix C: Common Packaging Specifications

13.1. Small Polished Part Packaging Requirements

This specification covers requirements for packaging of small, polished parts such as steps, hood ornaments, side shells, pipes, etc. This applies to parts that are supplied to PACCAR Parts.

1. Each individual part shall be wrapped in heavy craft paper.

2. The paper shall be taped to the non-polished face of the part or to another end of the paper.

3. The parts shall be individually over packed in corrugated boxes or in bags, depending upon factors such as weight, size, cost and/or specific PPD instructions.

4. If boxed, the part shall be adequately supported inside of the box to prevent movement and damage.

5. The packages shall be closed/sealed (with tape, heat sealed, etc.)

6. No staples shall be used in any part of the packing.

7. Every effort should be made to use a container that limits void fill requirements.

8. Parts that are sold to PACCAR Parts in packaging that will remain with the product until final sale must be properly identified with a minimum of one label. Please see the PACCAR Parts Supplier Information System (SIS) for additional labeling and/or packaging information.

13.2. Specification for Polished or Chromed Parts

This specification covers requirements for packaging of polished parts such as steps, hood ornaments, side shells, exhaust pipes, exhaust stacks, bumpers, etc. This applies to parts that are supplied to PACCAR Parts.

1. Each individual part shall be wrapped in heavy craft paper.

2. The paper shall be taped to the non-polished face of the part or to another end of the paper, but under no circumstances to the polished faces of the part.

3. The paper wrapped part shall be further wrapped in bubble wrap, ensuring the entire part is covered, with particular attention to the top and bottom ends.

4. The bubble wrap shall be taped to the non-polished face of the part or to another end of the wrap, but under no circumstances to the polished faces of the part.

5. The parts shall be individually over packed in a corrugated box. The box must be an appropriate burst and ECT for the part it protects per AICC standards.

6. The part shall be adequately supported inside of the box to prevent movement and damage. An additional pad of bubble wrap shall be applied to each end, inside the lid.

7. The box shall be closed/sealed with glue. No staples shall be used in any part of it packing.

8. All other PACCAR Parts packaging guidelines apply. Please see the PACCAR Parts Supplier Information System (SIS) for additional labeling and/or packaging information.

13.3. Specification Hood Packaging

Revised February 2016

The specifications contained herein, along with a close cooperation between PACCAR Parts and our suppliers, will enable us to benefit through increased efficiency and consistency in the movement of materials through our distribution system.

These specifications apply to all PACCAR Parts suppliers involved in the manufacture and shipment of fiberglass and aluminum hoods. Crates must be constructed to comply with NMFC Item 245 (see below) as well.

Suppliers must be in conformance with all requirements of these specifications. Variations may be permitted if previously approved, in writing, by PACCAR Parts. Failure to comply with this guideline may result in infractions and monetary penalties.

1.0 Labeling: Crates are to be labeled in large bold characters on the front side with the appropriate PACCAR part number and barcode.

2.0 Materials: All lumber must perform to a minimum grading of ECONOMY. Materials that are critical to the support of the product and integrity of the crate must also perform to these additional standards.

- 2.1 Knots – limited to a displacement of approximately 2/3 the cross section and one per linear foot.
- 2.2 Splits – equal to 1/6 the length of the piece.
- 2.3 Unsound wood – in spots or streaks limited to 1/3 the cross section at any point along the length. Must not destroy nailing edge.
- 2.4 Wood must carry an HT stamp and be compliant with Solid Wood Packaging Material Requirements (ISPM15).
- 2.5 Coated ring shank nails must be used throughout the construction.

3.0 Pallets: Must be constructed so that they can withstand rough handling.

- 3.1 They will be constructed having 4-way entry.
- 3.2 They will be reinforced diagonally to resist torquing.
- 3.3 They will be reinforced in the middle, to prevent deck boards cracking and to allow them to be safely picked up with a device utilizing fork extenders.
- 3.4 They will have a 2”x4” center stringer allowing fork trucks to lock to them, when that will not compromise the pallet’s load bearing capability.

4.0 Crating: All crates must incorporate four walls of uniform height to protect the hoods during handling and transit. These walls are to be constructed with a

minimum of 1” x 6” lumber, are to be joined with 3-way overlap corners and must extend above the decking of the pallet to the height of the hood.

4.1 All crate surfaces that are in contact with the part, excluding hardware mounts, must be covered with a suitable non-abrasive pad material such as polyethylene foam sheeting.

4.2 Finished (polished or painted) surfaces must be covered. Shrink wrap or marine wrap are acceptable.

4.3 Exposed non-finished surfaces, such as hood edges, must be padded as well against impact or abrasion.

4.4 Hoods must be contained within the dimensions of the base pallet. Under no circumstances may any portion of the hood overhang the edges of its pallet.

4.5 Pallet dimensions are to extend at least 1” beyond the dimensions of the hood.

5.0 Mounting: The design of all mounting/attachment surfaces and assurance of their stability is the responsibility of the supplier. Supports must resist both front-to back and side-to-side movement of the load.

5.1 It is preferred that, whenever possible, hoods are crated in a horizontal orientation to allow decking.

5.2 All aluminum, and those fiberglass hoods with an overall crated height less than 57”, must be crated in a horizontal orientation. See image Sample Crate 2 below.

5.2.1 When mounting hardware is present the hood must be bolted through them to the pallet.

5.2.2 Proper steel or nylon banding must be used to anchor the hood to the mount. Plastic wire ties are not acceptable.

5.3 Fiberglass hoods that have an overall height of 57” or more are to be mounted in a vertical orientation. See image Sample Crate 1 below.

III. Additional Resources:
National Motor Freight Classification: Item 245
DEFINITION OF OR SPECIFICATIONS FOR CRATES
Crates are containers constructed of members made of sawn wood or structural panels or metal with apertures between, or members made of sawn wood or structural panels, or metal combined with fiberboard, securely nailed, bolted, screwed, riveted, welded, glued, dovetailed, or wired and stapled together, having sufficient strength to hold the article packed therein to protect it from damage when handled or transported with ordinary care. Crates must be constructed to protect contents on the sides, ends, tops and bottoms, and in such manner that the crate containing its contents may be taken into or out of the vehicle. Contents must be securely held within crates and no part shall protrude, unless otherwise provided in individual items. Surfaces liable to be damaged must be fully covered and protected. All moveable contents within the crate must be blocked and/or braced to prevent any shifting during transportation. Commodities with legs must be suspended away from all edges of the crate by at least one inch. If the weight of the commodity exceeds 500 pounds, a standard crate must be used instead of a wire bound crate.

Wooden crates, other than wire bound crates, must be constructed as follows:
(1) Lumber must be seasoned, reasonably sound, and free from cross grain and knots which would interfere with nailing or stapling, or knots which are greater than 1/3 the width of the lumber.
(2) Crates must be constructed with outer framework consisting of upright and horizontal members and with additional diagonal upright and horizontal members where necessary to provide proper strength and rigidity.
(3) Crates must be constructed with three-way locking corners, where members will be joined with nails or staples driven into side grain of joining members. Examples are shown below:

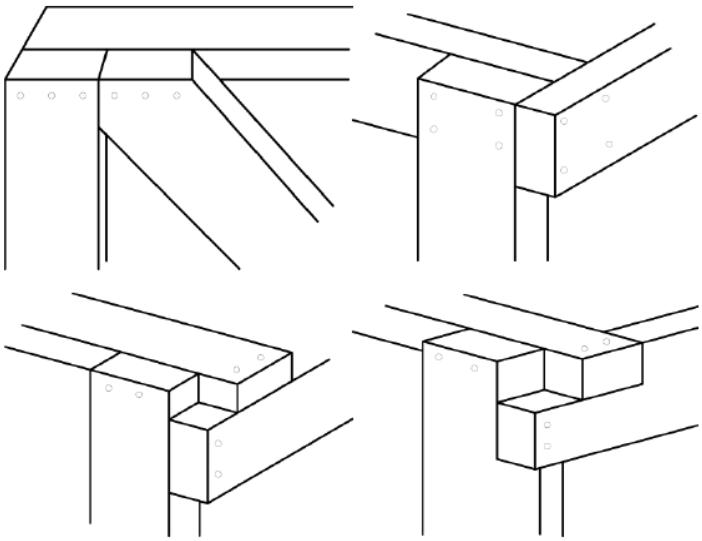

(4) All joining crate members must be fastened by double nailing or stapling.
(5) Crates must be designed and constructed with transverse cross-members at base sufficient in strength to protect underside of article from damage by mechanical handling equipment.

(6) Structural panels, including plywood, oriented strand board (OSB), and wafer board, must be manufactured with exterior glue.

Sample Crate 1 – Front Face - Vertical Mount

Sample Crate 1 – Side Face – Vertical Mount

Sample Crate 2 – Front Face - Horizontal Mount

Sample Crate 2 – Side Face - Horizontal Mount

14. Appendix D: Infraction Violation Codes

Code	Description
1	Substandard Container Packaging
2	Improper Kit/SPQ Packaging
3	Shipping Consolidation: Shipments Not Consolidated
4	Incorrect Carrier/Channel: LTL vs Parcel
5	Shipped to Wrong Location
6	Wrong Part Number Shipped
7	Master/Container Label Issue
8	Incorrect Quantity Shipped
9	Packing Slip Issue
10	Purchase Order Discrepancy
11	NAFTA Duty: Infraction for Duty Paid on NAFTA Eligible Product
12	Other
13	Mexico Border Crossing Issue
14	Canada Border Crossing Issue
15	Individual Part Label Issue
16	Supplier not using PPD Transportation System
17	Incorrect Carrier Used to Parts Warehouse
18	DSP Shipment Not Compliant
19	Pallet Dimensions Not Compliant
20	Individual Part Packaging Issue

15. Appendix E: Aftermarket Packaging Approval Process Form

The Aftermarket Packaging Approval Process (APAP) form is used to increase shipment and storage efficiency of PDC stocking parts, and its use is essential to reduce instances of part damage and packaging infractions.

- Contact the Aftermarket Packaging Team for additional information.

PACCAR PARTS

Aftermarket Packaging Approval Process

* This approval is for PDC stocking parts only.* DSP does not apply.
All packaging changes, new parts or programs require an approval signature from the PPD Aftermarket Packaging Manager.

Hover mouse over header cells to read comments for additional assistance.

It is the expectation of the supplier to comply with The Aftermarket Packaging Guidelines.
Approval of packaging does not dismiss the supplier of responsibility for quality of parts and ensuring that the part is not compromised from supplier to end user.

Test shipments are encouraged. Send this form and test shipment tracking information to Jennifer.Lam@PACCAR.COM.

Select a reason for APAP: New Part(s) ☐ Change ☐ Existing Part(s) ☐

Vendor Name:	Truck Parts
Vendor Code:	056276A
Contact Name:	John Smith
Contact Email:	tscipart@truck.com
Phone Number:	425-254-4992

Part Photo

Packaging Material Photo

Part in Retail Packaging

Over Pack Photo

Additional Supplier Comments:

Item Details			Quantity Details				CURRENT: Packaging Dimensions per Saleable Unit (SPQ) Retail Packaging Only				PROPOSED: Packaging Dimensions per Saleable Unit (SPQ) Retail Packaging Only				Part Dimensions per Piece Part Only (disregard packaging and any SPQ)				Full Pallet Dimensions With Product (Standard Pallet size is 48x40 or 24x40, with the exception of oversized parts)				Packaging Type Indicator (Select from each drop down)			(E: Rubber, Steel, Plastic)	(E: Pallet, Buckboard, Carton)
Part Number	Implementation Date	Approved Date	Min/ Mult	Standard Packaging Quantity (SPQ)	Unit of Measure (UoM)	Pallet Quantity	Packaging Weight (LB)	Packaging Length (IN)	Packaging Width (IN)	Packaging Height (IN)	Packaging Weight (LB)	Packaging Length (IN)	Packaging Width (IN)	Packaging Height (IN)	Part Weight (LB)	Part Length (IN)	Part Width (IN)	Part Height (IN)	Pallet Weight (LB)	Pallet Length (IN)	Pallet Width (IN)	Pallet Height (IN)	Individual (Retail Packaging Type)	Packaging Brand	Label Brand	Part Composition	Over Pack Type
P27-1250-026-01	Upon First Order	2/15/2022	1	1	EA	5000	0.1	2.5	0.75	2	0.1	2.5	0.75	2	0.075	2.5	0.75	2	550	48	40	44	W-Bubble Wrap	N-No Brand	V-Vendor	Plastic	Pallet

16. INDEX

AIAG, 28
barcode, 21, 22, 27, 28
Boxes, 12
Cartons, 12
Composition, 6
container, 31
Container, 10, 12, 13, 14
Over-pack, 31
Damage, 6
Date of manufacture, 23
Dimensions, 7
Dunnage, 13, 31
Federal Regulations, 30
Footprint, 31
Fumigation, 6
Glossary, 31
Hazardous, 30
Heat-Treatment, 6
Height, 6
infractions, 5
ISPM, 6
Label, 21
Labels, 21, 22, 24, 25
Material, 13, 30
Materials, 30, 31
Maximum, 6
Minimum, 12
Mixed, 11, 21, 23, 25, 26, 31
SDS, 30
Over-pack, 31
Packaging, 31
Packing Slip, 21, 24, 29, 34
Packing Slips, 29
Pallet, 6, 7, 13, 15, 21, 22, 25
Partitions, 31
PPD, 28
Required, 27
Requirements, 6, 12, 21
Serial, 31
Size, 6
SPQs, 29
Stringer, 6, 31
Supplier, 13, 24, 27, 28, 29
Vendor code, 23
Weight, 6, 10, 12, 16
WPM, 7